MICC Thermocouple

Thermocouple consists of two wires, each made of different metal, welded together at one end. When the welded point(measuring junction) is heated, a thermoelectromotive force is produced that is proportional of the temperature difference between the welded point and the other end (reference junction). Therefore, by messuring this thermoelectromotive force either with the reference junction temperature kept constant or by using an automatic compensation curciut, the measuring junction temperature can be measured.
The thermoelectromotive force of a thermocouple is independent of the diameter or length of the wire used and depends only on the type of wire used.

(a). Type of Thermocouple Core

Material Type	Leg	core material	Leg dia		JIS C 1602		ANSI
			JIS	ANSI	Max.operating temp . In normal application(℃)	Max.operating temp . In overheated application(℃)	Max.operaring temp.(℃)
B	+	Platinum 70% + rhodium 30%	0.5	0.5	1500	1700	1700
	-	Platinum 94% + rhodium 6%	0.5	0.5			
R	+	Platinum 87% + rhodium 13%	0.5	0.5	1400	1600	1480
	-	high purity platinum	0.5	0.5			
S	+	Platinum90%+ rhodium 10%	0.5	0.5			
	-	high purity platinum	0.5	0.5			
K	+	Nickel 90% + chromiun 10% Nickel 95% + Manganese 2% +Aluminum 2%	3.2	3.2	1000	1200	1260
			2.3	1.6	900	1100	1090
			1.6	0.8	850	1050	980
			1	0.5	750	950	870
			0.65	0.32	650	850	870
E	+	Nickel 90% +chromiun 10% Copper 55%+nickel 45 %	3.2	3.2	700	800	870
			2.3	1.6	600	750	650
	-		1.6	0.8	550	650	540
			1	0.5	500	550	430
			0.65	0.32	450	550	430
J	+	high purity iron Copper 55%+nickel 45 %	3.2	3.2	600	750	760
			2.3	1.6	550	750	590
	-		1.6	0.8	500	650	480
			1	0.5	450	650	370
			0.65	0.32	400	500	370
T	+	high purity copper Copper 55%+nickel 45 %	1.6	1.6	300	350	370
			1	0.8	250	300	260
	-		0.65	0.5	200	250	200
			0.32	0.32	200	250	200

In addition to the above, special thermocouples such as L type, C type (W-W26% Re), Cu-CoAu etc,are available

(b). Standard type of hot junctions

Grounded	Un-grounded	Exposed
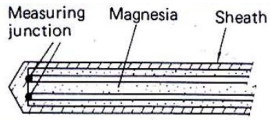	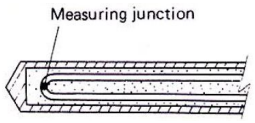	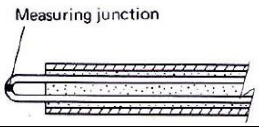

(c). MI type probe data

Sheath Material				Outer Sheath(mm)		Core Wire Dia.(mm)	
K, N Types	E, J, T Types	S, R Types	B Types	Out Dia.	Wall Thickness	K,N,E,J,T Types	S,R,B Types
SS304, SS321, SS316, SS310, Incl600, Nicrobell	SS304, SS321, SS316	Incl600, Nicrobell	Incl600, Nicrobell	0.5	0.05-0.10	0.08-0.12	---
				1.0	0.10-0.20	0.15-0.20	---
				1.5	0.15-0.25	0.23-0.30	---
				1.6	0.16-0.26	0.26-0.36	---
				2.0	0.25-0.35	0.40-0.50	0.25-0.30
				3.0	0.38-0.48	0.50-0.60	0.30-0.40
				3.2	0.48-0.58	0.58-0.68	0.30-0.40
				4.0	0.52-0.62	0.60-0.70	0.35-0.40
				4.8	0.73-0.83	0.75-0.85	0.40-0.45
				5.0	0.78-0.88	0.80-0.90	0.40-0.45
				6.0	0.98-1.08	0.90-1.10	0.45-0.50
				6.4	1.05-1.15	1.02-1.12	0.45-0.50
				8.0	1.30-1.44	1.30-1.40	0.45-0.50
				12.7	1.75-1.90	1.95-2.05	---

1. Mineral Insulated Thermocouple

Thermocouples in this series are available in a variety of materials, diameters and calibrations to meet your specific needs.
Can be supplied with:
Pot–Protects the connection between the mineral insulated cable and the wire assuring a reliable and durable measurement.
Head– Protects the connections from dust, moisture and installations in areas classified as explosive atmosphere (explosion proof) and can be supplied assembled with temperature transmitter;
Wiring block– This assembly allows the directly use in the process or as replacement elements used in assemblies with protection tubes or with wells and heads;
Connectors – Allows an easy and quick connection with the wire or extension cables. The connector is polarized, the negative pin has a large diameter avoiding the inversion of the link. Available in two sizes, standard and mini.

TC-MIT001

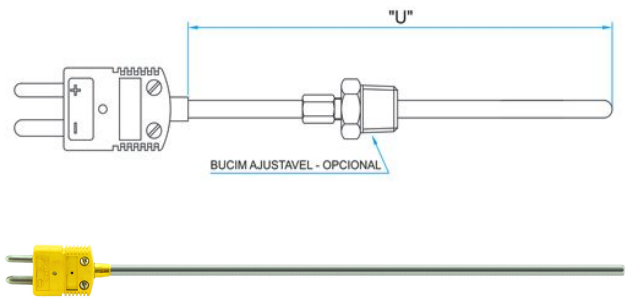

TC-MIT002

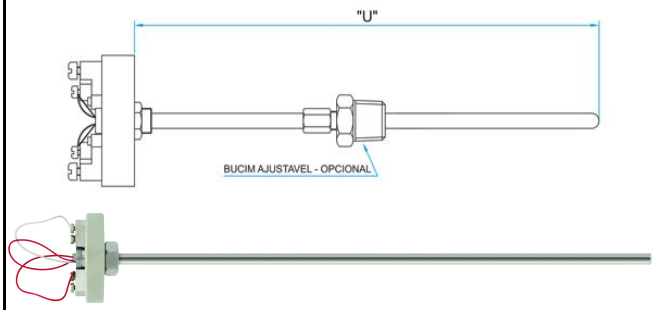

TC-MIT003

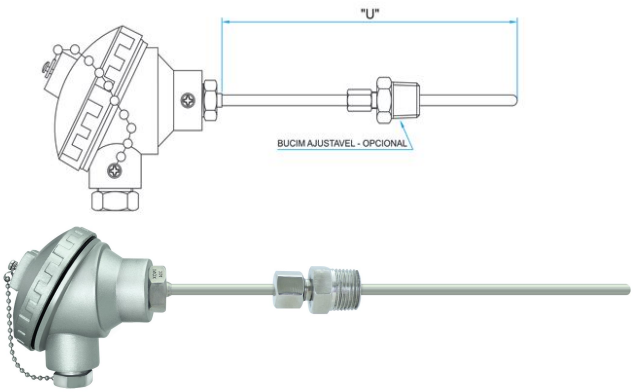

TC-MIT004

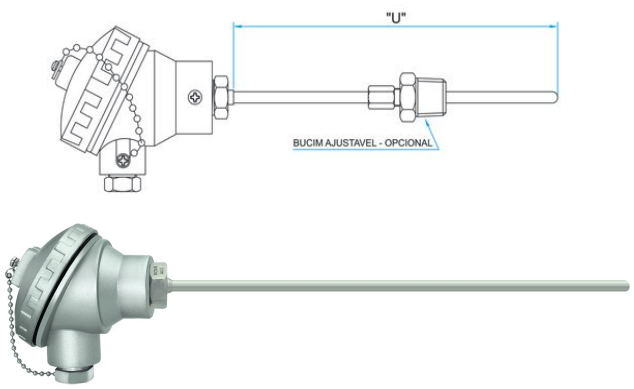

TC-MIT005

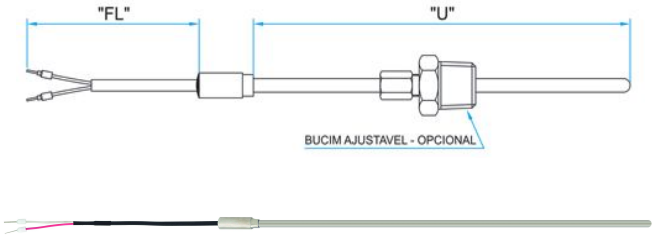

TC-MIT006

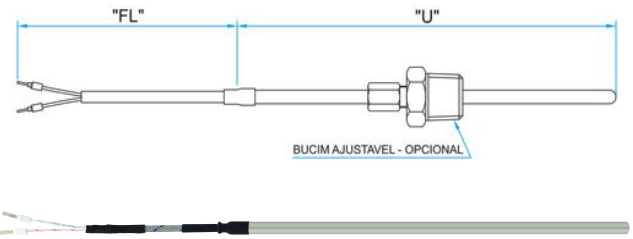

2. Mineral Insulation Thermocouple with Metallic Protection Tube

The thermocouples in this series can be combined with various types of materials for protection tubes, which prolong the life of the sensor, it makes easier the replacement of the element without the need of process stops.
The thermocouple can be supplied with smooth tube, fixed bushing with thread or with adjustable flanges and can be assembled with analog temperature transmitter, microprocessor with or without communication and protocols (for more information, see our sales department).

TC-MIT007

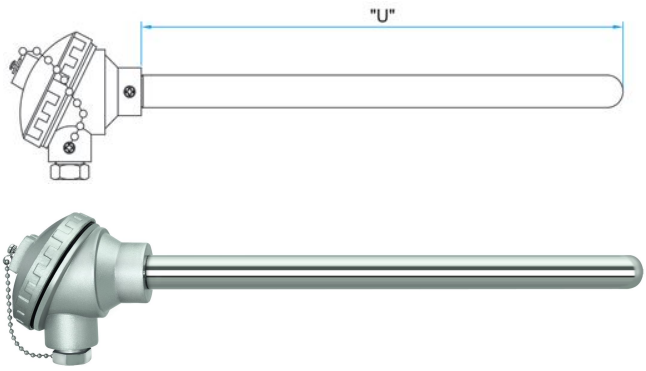

TC-MIT008

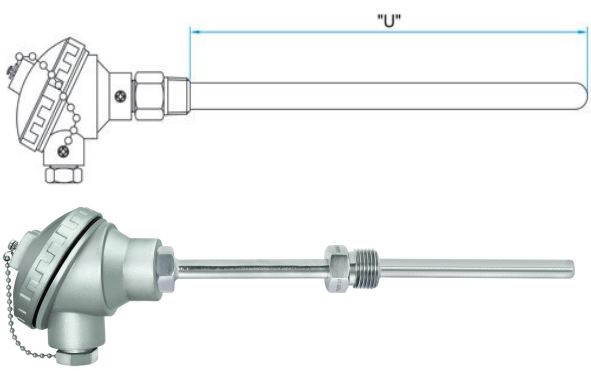

TC-MIT009

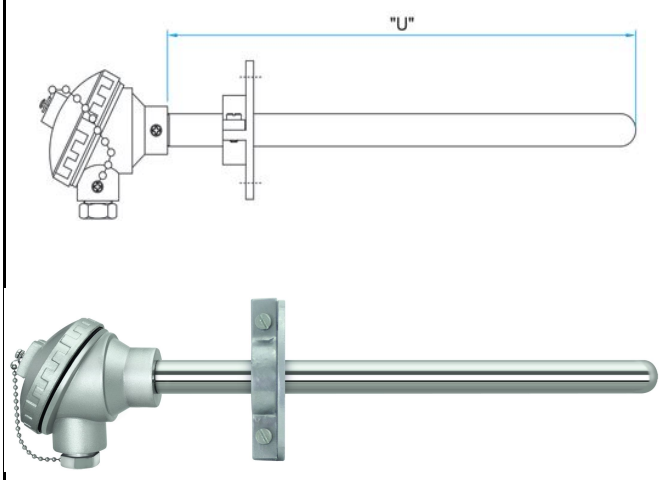

TC-MIT010

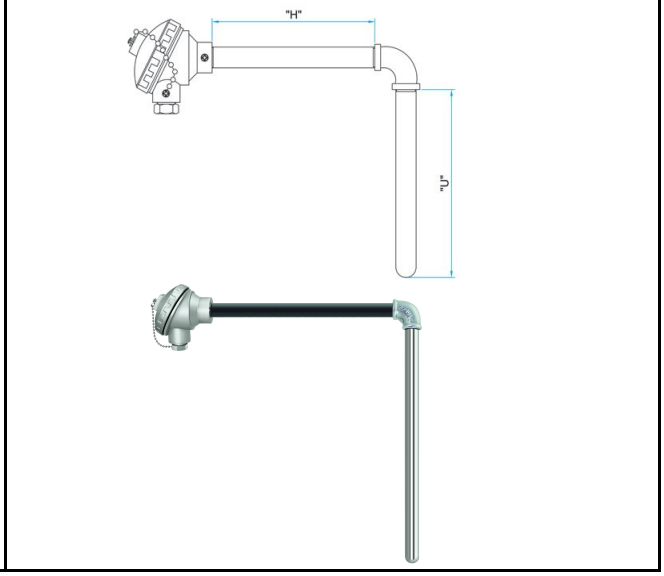

3. Conventional Basic Thermocouple

The thermocouples in this series require additional protection and are normally used as replacement elements in protective tube and head assemblies, and are also compatible for use in sets from other manufacturers.

The thermocouple wires with smaller gauges provide faster response time and lower life and larger gauges provide longer life, however, slower response time.

TC-CBT011

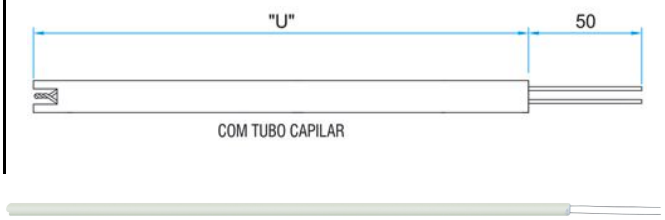

TC-CBT012



TC-CBT013



TC-CBT014

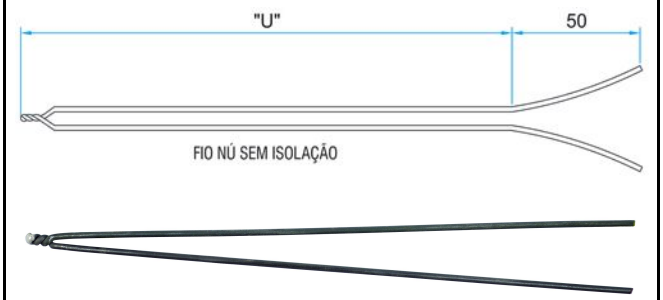

4. Conventional Ceramic Thermocouple

These thermocouples are typically used in high temperature processes in furnaces in the ceramic industry, glassmaking, foundry and in places where the use of metallic protections due to high temperatures is not allowed, chemical attacks or sometimes at lower temperatures where the media or the environment atmosphere is harmful to metallic tubes.

TC-CCT015

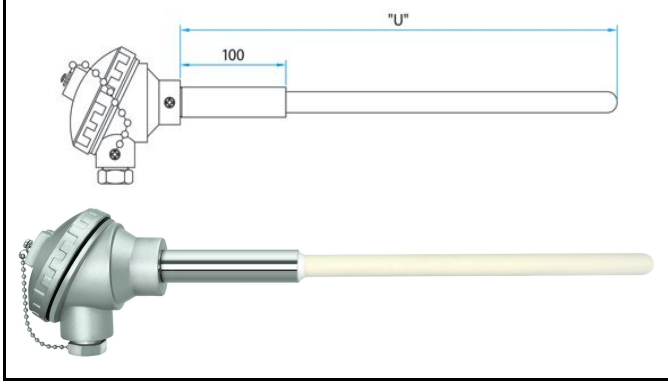

TC-CCT016

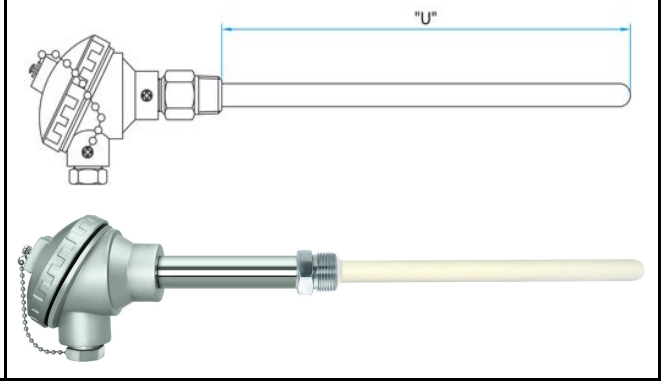

TC-CCT017

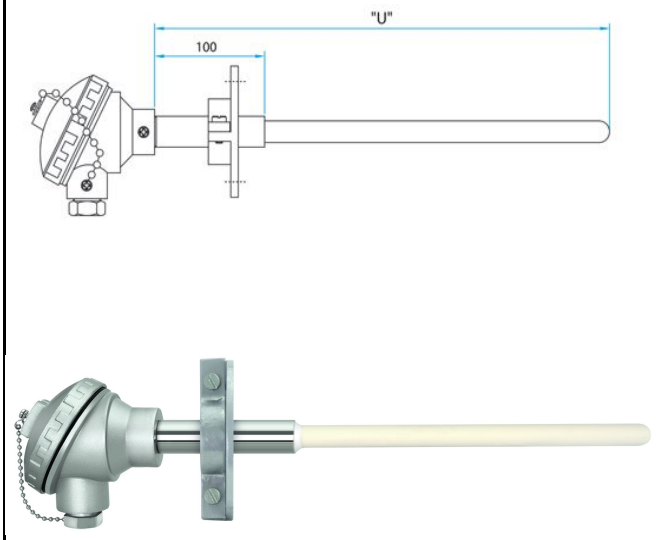

TC-CCT018

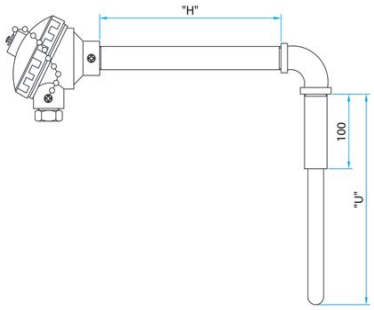



5. Flexible Thermocouple

Ideal for use in the plastic process industry or in applications where it's needed: easy installation, easy removal and quick response time.
These sensors are inexpensive and can be supplied with bayonet fittings for quick and easy installation and with a threaded spring allowing adjustments to the insertion length.
Main applications: plastic injection molding machines, extruders, shell molding, packaging machinery, etc.

TC-FT019

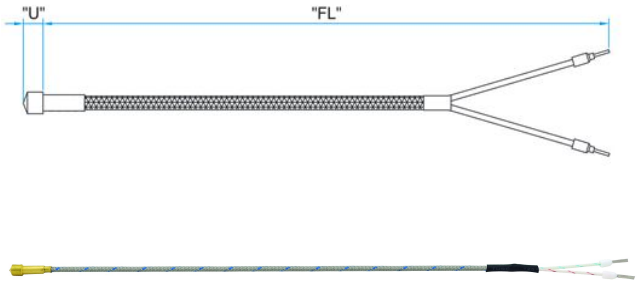

TC-FT020

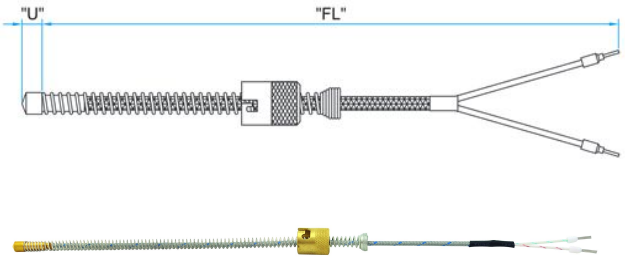

TC-FT021

