MICC MICC TECH. LIMITED

Easy-way Laser Marking Machine

Features

- Integrated design, lightweight and convenient.
- It can engraving metal materials and some non-metallic materials.
- It mainly used in the fields with high requirements on depth, smoothness and fineness.
- Fiber laser marking machine adopts an integrated structure of optical fiber laser output laser, and then through the high-speed scanning mirror system to achieve perfect marking function, optical fiber laser marking electromechanical optical conversion up to more than 20%, with semiconductor laser.
- Compared with standard machine, it has higher beam quality, high photoelectric conversion rate, adopts air cooling method for cooling, and consumes less power.
- Small size, theoretical life of fiber laser up to 100,000 hours, long operating life, is a new type of environmental protection and energy-saving laser marker.

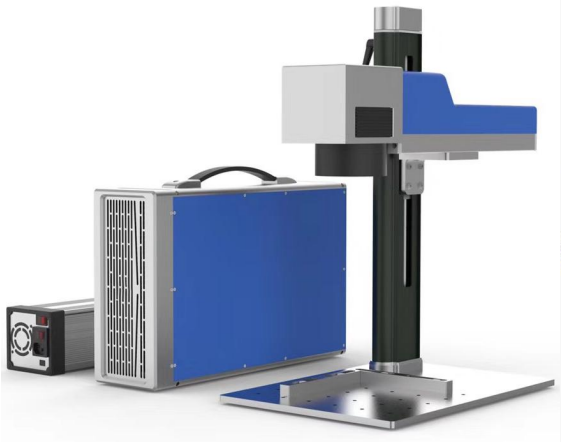

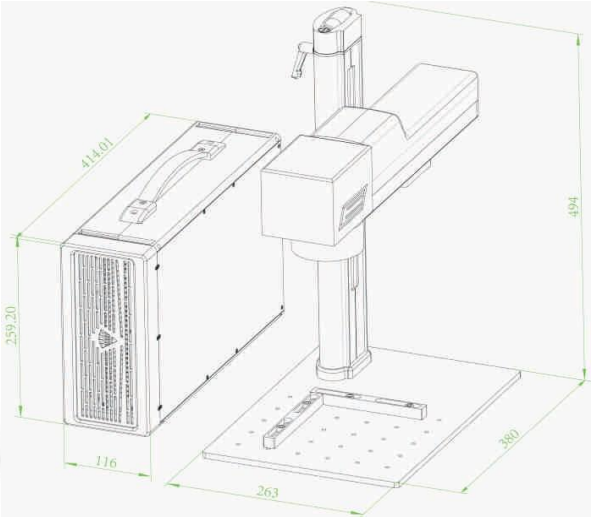

Packing picture





www.micc.cc
email: micc@micc.cc tel:+86 25 8644 2824 fax: +86 25 5246 8824 whatsapp: +86 139 1388 6088

MICC MICC TECH. LIMITED

Technology Parameter

Type	DXH-F020-B
Average Output Power	20W
Working Area	110*110mm (Standard) ; 175*175mm (Optional)
Laser Wavelength	1064nm
Engraving Speed	≤7000mm/s
Repeatability	±0.01mm
Beam Quality	<1.5
Engraving Depth	0.05-0.5mm (Decided by material and power)
Min Line Width	0.03mm
Column Lift Range	140-370mm(The Platform is to the end of the f-theta lens)
Working Environment Requirement	Temperature：0~40°C; Humdity：30%≤RH≤85%
Power Supply	<800W/AC220V 50HZ
Weight	≥20kg

Product Advantages



High Speed Marking

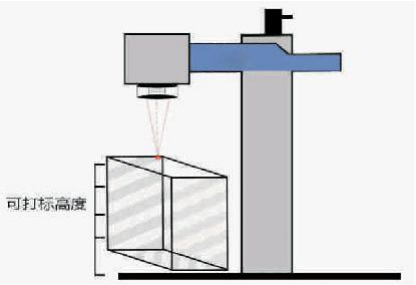

Adapting for different Height

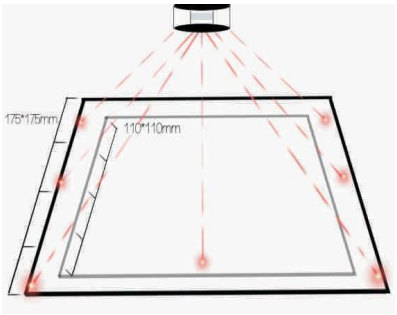

Adapting to Different Marking Area

www.micc.cc
email: micc@micc.cc tel:+86 25 8644 2824 fax: +86 25 5246 8824 whatsapp: +86 139 1388 6088

MICC MICC TECH. LIMITED

Application

Fiber laser ablation/ surface removal

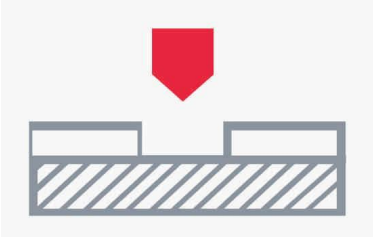

This process is typically used to remove paint, coatings and othersurface materials to create contrast but without damaging the subs-trate. Common applications are car dashboards and aircraft display.Other applications include backlit buttons, anodized aluminum andsurfacepainting.

Fiber laser Engraving

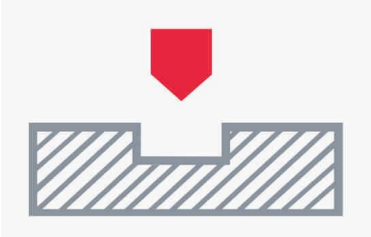

While fiber laser engraving, the surface of the products are melted bythe laser and evaporated. Therefore, the laser beam will remove thematerial. That means laser induced ablation by melting or evaporatingsubstrates. Engraving is a method for permanent and direct markingthat is anti-counterfeiting, wearproof and corrosion resistant.

Sample Show



Sample Show



www.micc.cc
email: micc@micc.cc tel:+86 25 8644 2824 fax: +86 25 5246 8824 whatsapp: +86 139 1388 6088